Conserv Genet (2009) 10:1209–1221
DOI 10.1007/s10592-008-9652-8

RESEARCH ARTICLE

Population structure and genetic management of Rio Grande cutthroat trout (*Oncorhynchus clarkii virginalis*)

V. L. Pritchard · J. L. Metcalf · K. Jones · A. P. Martin · D. E. Cowley

Received: 5 July 2007 / Accepted: 31 July 2008 / Published online: 15 August 2008
© Springer Science+Business Media B.V. 2008

Abstract The Rio Grande cutthroat trout, *Oncorhynchus clarkii virginalis*, has declined precipitously over the past century, and currently exhibits a highly fragmented distribution within the Canadian, Pecos and Rio Grande river systems of the western United States. The relationships between populations in the three river drainages, and between *O. c. virginalis* and the closely related taxa *O. c. pleuriticus* and *O. c. stomias*, are not well understood. In order to guide management decisions for the subspecies, we investigated the distribution of variation at 12 microsatellite loci and two regions of the mitochondrial genome. We observed a high level of genetic differentiation between *O. c. virginalis* populations occupying different headwater streams (global $F_{st} = 0.41$). However, we found evidence for previous gene flow within the Rio Grande drainage, indicating that inter-population differentiation may have been exacerbated by the recent effects of population fragmentation. Despite large-scale anthropogenic movement of individuals from the Rio Grande into the Canadian and Pecos, the genetic signature of long-term evolutionary independence between the three drainages has been retained.

Keywords Conservation genetics · Management unit · *Oncorhynchus clarkii* · Microsatellite · Salmonid · Stocking

Electronic supplementary material The online version of this article (doi:10.1007/s10592-008-9652-8) contains supplementary material, which is available to authorized users.

V. L. Pritchard · D. E. Cowley
Department of Fishery & Wildlife Sciences, New Mexico State University, Las Cruces, NM 88003, USA

K. Jones
Genetic Identification Services, Chatsworth, CA 91311, USA

J. L. Metcalf · A. P. Martin
Department of Ecology and Evolutionary Biology, University of Colorado, Boulder, CO 80309, USA

V. L. Pritchard (✉)
University of Southern California, 3616 Trousdale Parkway, Los Angeles, CA 90089-0371, USA
e-mail: vpritcha@usc.edu; vpritcha@hotmail.com

Introduction

The cutthroat trout (*Oncorhynchus clarkii*) of western North America comprises nine extant recognized subspecies, which have been heavily impacted over the past two centuries by habitat destruction, over-fishing and competition or hybridization with non-native trout (Peacock and Kirchoff 2004; Peterson et al. 2004; Shemai et al. 2007). Most subspecies now exhibit a fragmented distribution within a fraction of their native range, primarily confined to small, high-altitude streams or lakes which may represent marginal habitat (Young 1996; Novinger and Rahel 2003). Conservation efforts focus on identifying, monitoring and protecting 'genetically pure' populations and expanding the range of the subspecies via artificial introductions. Management actions include construction of barriers to exclude non-native trout, and broodstock development.

While several cutthroat trout subspecies appear to have diverged 1–2 million years ago (Loudenslager and Gall 1980; Leary et al. 1987; Allendorf and Leary 1988), others have a much shallower evolutionary history. The Rio Grande cutthroat trout (*O. c. virginalis*), the most southerly subspecies, may have arisen from a transfer of ancestral Colorado River cutthroat trout (*O. c. pleuriticus*) over the North American Continental Divide less than 100,000 years ago

(Behnke 2002). Trout classified as *O. c. virginalis* currently occupy three river systems in the U.S. states of New Mexico and Colorado; the Canadian River, the Pecos River and the Rio Grande (Fig. 1). The Pecos and Rio Grande converge in southern Texas, and movement of trout between these two systems may have been possible under Pleistocene climatic conditions. The Canadian River converges with the Arkansas River, a tributary of the Mississippi. The federally threatened greenback cutthroat trout, *O. c. stomias* is native to the Arkansas headwaters; hence trout in the Canadian River may be more closely related to this taxon. Alternatively, *O. c. virginalis* may have been artificially introduced to the Canadian drainage (Behnke 2002). Trout may have also moved between the three river systems via headwater transfer (Behnke 2002) or pluvial lakes (Bachhuber 1989). Although *O. c. pleuriticus*, *O. c. stomias* and *O. c. virginalis* have been noted to differ in morphological features such as spotting pattern and lateral scale count, there is much variation in these characters within the subspecies and substantial overlap between them (Behnke 2002). Behnke (2002) noted morphological divergence between *O. c. virginalis* in the Pecos and Rio Grande, with the Pecos strain more closely resembling *O. c. stomias*. Previous studies found no influence of river drainage on allozyme variation

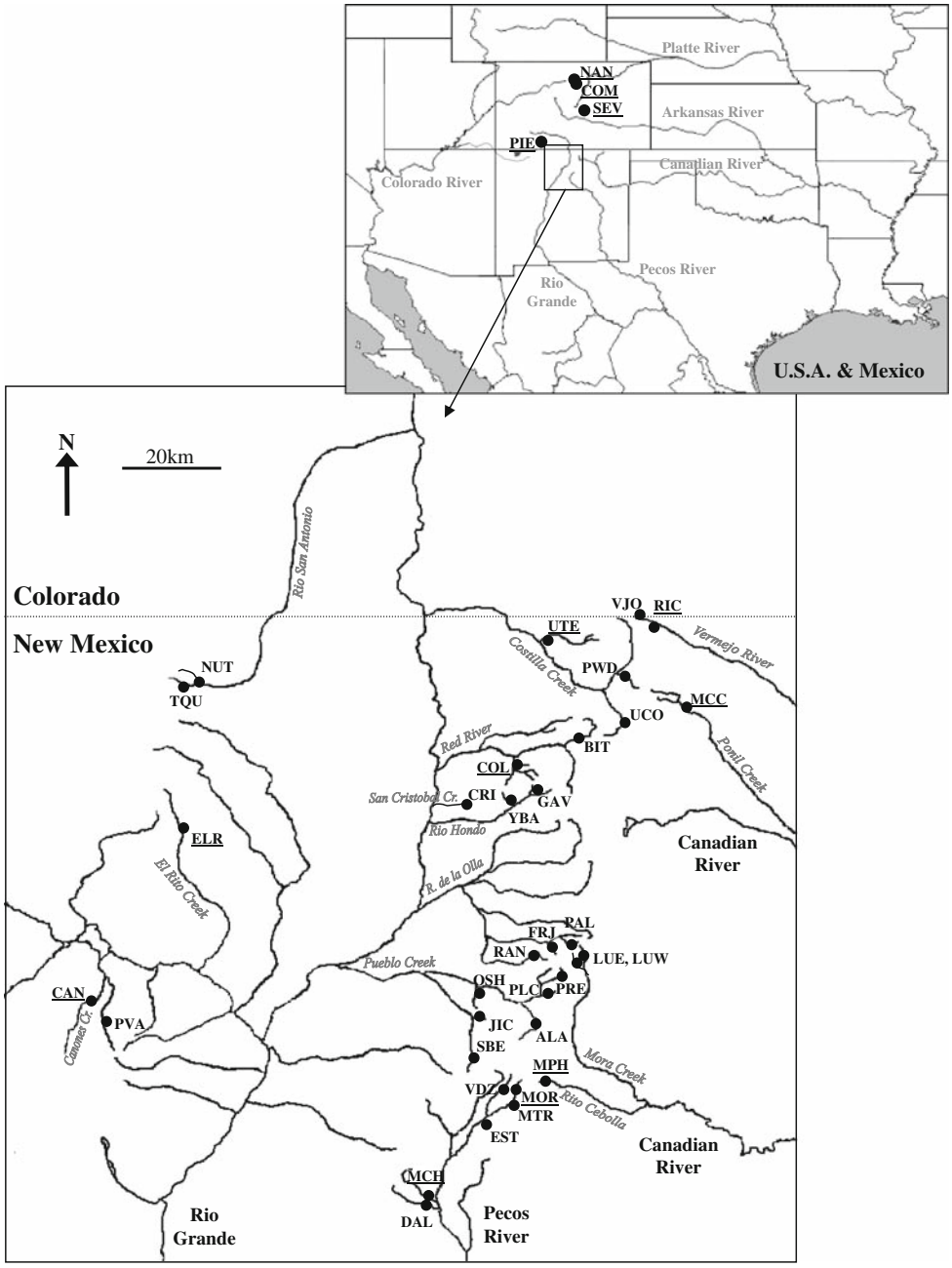

Fig. 1 Sampling locations for cutthroat trout populations included in this study. For *O. c. virginalis*, points indicate known downstream extent of the population. Consult Table 1 for population abbreviations

within *O. c. virginalis* (Keeler-Foster 2003; New Mexico Department of Game and Fish [NMDGF], unpublished data).

Contemporary population genetic structure within *O. c. virginalis* should reflect both long-term evolutionary processes and recent anthropogenic disturbances, including fragmentation, hybridization, and stock transplants. In New Mexico, a hatchery line of *O. c. virginalis* ('New Mexico cutthroat') originating primarily from the Rio Costilla in the Rio Grande, was stocked throughout the Canadian, Pecos and Rio Grande drainages over several decades in the mid 20th century. Many transplants occurred into waters that still contain populations of the subspecies (NMDGF, unpublished data). This human-mediated migration may have obscured genetic differentiation previously present between drainages.

We used 12 microsatellites and two regions of the mitochondrial genome to address population genetic questions relevant to the management of *O. c. virginalis*. First, we investigated genetic differentiation between populations in their current fragmented state. Second, we investigated whether these genetic markers revealed inter-drainage differentiation. Third, we compared the genetic composition of *O. c. virginalis* populations to that of representative *O. c. stomias* and *O. c. pleuriticus* populations, to examine whether any represented anthropogenic transplants of a different subspecies, and to draw preliminary conclusions about the evolutionary relationships between the three subspecies.

Materials and methods

Tissue collection

Tissue samples ($n = 829$) were obtained from 20 populations of *O. c. virginalis* in the Rio Grande drainage, six populations in the Pecos drainage and six populations in the Canadian drainage (Table 1; Fig. 1), utilizing a sampling scheme previously described (Pritchard et al. 2007a, b). Most samples were fin clips, collected between 1996 and 2004, however some tissues collected at an earlier date were also included (GAV2, MPH, PAL2, YBA2). At one location, individuals were sampled both upstream (RICa) and downstream (RICb) of a recently constructed barrier. Additional samples ($n = 93$) were obtained from two populations of *O. c. stomias* located in the Arkansas and South Platte drainages of Colorado, and two Colorado populations of *O. c. pleuriticus* (Metcalf et al. 2007). All sampled populations had previously been assessed to contain little or no genetic material from Yellowstone cutthroat trout (*O. c. bouvieri*) or rainbow trout (*O. mykiss*), the two potentially hybridizing non-native congeners known to have been locally introduced (J. Metcalf and NMDGF, unpublished data; Keeler-Foster 2003; Pritchard et al. 2007a).

Genetic analyses

For all individuals we amplified twelve tetranucleotide microsatellites (J3, J14, J103, J132, K216, K222, H12, H18, H114, H118, H126, H220) using methods previously described (Pritchard et al. 2007a, b, c). We binned all alleles into 4 bp size categories. For a subset of individuals (Table 1; Fig. 1), we obtained sequence information for two regions of the mitochondrial genome: a 641 bp region of the cytochrome oxidase I gene and an 889 bp region including the entire ND2 gene, using methods described in Metcalf et al. (2007). We also obtained sequence data for one individual each of Lahontan cutthroat trout (*O. c. henshawi*) and Yellowstone cutthroat trout (*O. c. bouvieri)*. Sequencing was performed by Functional Biosciences, Inc. (http://www.functionalbio.com/) and Nevada Genomics Center (http://www.ag.unr.edu/genomics/).

Other information

Stream distances between populations were estimated using ArcView 3.2 (ESRI), utilizing 1:100,000 scale hydrography data obtained from the USGS National Hydrography Dataset (http://nhd.usgs.gov).

Microsatellite data analysis

For each sample, unbiased expected and observed heterozygosity (H_e and H_o, Nei 1987) and allelic richness were obtained using GENETIX 4.04 (Belkhir et al. 2001) and FSTAT 2.9.3.2 (Goudet 2001). Tests for conformation to Hardy Weinberg equilibrium (HWE) were performed for each locus in each sample using an MCMC approximation of an exact test implemented in GENEPOP 3.4 (Raymond and Rousset 1995). We also used such an exact test to test for linkage equilibrium for each locus pair in each sample. Significance of HWE tests over all loci in each sample, and significance of linkage equilibrium tests over all populations for each locus pair, was assessed using the binomial likelihood function (Chapman et al. 1999; Kinnison et al. 2002). The null hypothesis, for example no deviation from HWE, was rejected where $L < 0.05$.

Genetic population structure

We used GENETIX to calculate global and pairwise F_{st} values (θ, Weir and Cockerham 1984). We split temporally separated samples from the same population to investigate whether temporal changes in allele composition might confound estimation of inter-population differentiation (Tessier and Bernatchez 1999). We also separated samples from above and below the barrier in Ricardo Creek, to investigate barrier impact on population structuring.

Table 1 Sampling locations, numbers of individuals sampled for microsatellites (n) and mitochondrial sequence (n_{mit}), expected and observed heterozygosity, allelic richness (r) and total number of alleles (a) for all population samples. Estimates of r are based on the minimum sample size of 6 genotyped individuals. L(HW) indicates the likelihood that the sample is in Hardy Weinberg equilibrium based on the binomial likelihood test; 'ns' indicates $L > 0.05$. Presence of a known natural barrier isolating the population is indicated by 'Yes' in the final column

Taxon & drainage	Sub-drainage	Population	Code	n (n_{mit})	Lat.	Long.	H_e	H_o	a	r	L(HW)	Natural barrier?
O. c. virginalis	Rio San Antonio	Nutrias Creek	NUT	15	36.79	−106.25	0.49	0.51	38	32.3	ns	
Rio Grande	Rio San Antonio	Tanques Creek	TQU	15	36.82	−106.22	0.52	0.53	42	35.0	ns	
	Rio Costilla	Powderhouse Creek 1	PWD	15	36.87	−105.28	0.55	0.58	50	40.4	ns	
	Rio Costilla	Powderhouse Creek 2		15			0.58	0.59	51	42.3	ns	
	Rio Costilla	Upper Comanche Ck.	UCO	30	36.78	−105.59	0.58	0.56	79	47.0	0.045	
	Rio Costilla	Ute Creek	UTE	60(10)	36.94	−105.46	0.56	0.52	68	41.8	ns	
	Red River	Bitter Creek	BIT	30	36.74	−105.34	0.48	0.45	44	34.6	0.006	
	Red River	Columbine Creek	COL	30(7)	36.66	−105.52	0.53	0.48	54	37.5	ns	Yes
	San Cristobal	San Cristobal Creek	CRI	15	36.61	−105.61	0.45	0.49	40	33.3	ns	
	Rio Hondo	Gavilan Canyon 1	GAV	20	36.58	−105.48	0.56	0.51	48	38.4	ns	
	Rio Hondo	Gavilan Canyon 2		8			0.57	0.53	43	39.0	ns	
	Rio Hondo	Yerba Creek 1	YBA	20	36.57	−105.52	0.50	0.45	43	34.6	0.006	
	Rio Hondo	Yerba Creek 2		9			0.49	0.39	41	36.5	ns	
	Rito de la Olla	Frijoles Creek	FRJ	29	36.27	−105.41	0.53	0.56	48	34.3	0.006	
	Rito de la Olla	Palociento Creek 1	PAL	15	36.26	−105.45	0.42	0.42	33	28.4	ns	
	Rito de la Olla	Palociento Creek 2		13			0.50	0.46	35	32.6	ns	
	Rito de la Olla	Rio Grande del Rancho	RAN	15	36.24	−105.48	0.30	0.34	35	28.1	0.021	
	Rio Pueblo	Alamitos Creek	ALA	30	36.06	−105.47	0.43	0.44	40	30.1	ns	
	Rio Pueblo	Jicarito Creek	JIC	20	36.08	−105.61	0.31	0.28	30	24.6	ns	
	Rio Pueblo	Osha Creek	OSH	24	36.16	−105.61	0.24	0.24	23	20.4	ns	Yes
	Rio Pueblo	Santa Barbara E. Fork	SBA	15	36.03	−105.57	0.48	0.50	44	35.1	ns	
	Rio Pueblo	Policarpio Creek	PLC	30	36.14	−105.46	0.46	0.47	31	28.5	ns	
	Rio Pueblo	Rito de la Presa	PRE	20	36.19	−105.40	0.42	0.43	38	29.6	ns	
	El Rito Creek	El Rito Creek	ELR	40(15)	36.54	−106.27	0.58	0.59	71	42.4	<0.001	
	Canones Creek	Canones Creek	CAN	30(14)	36.13	−106.47	0.21	0.19	26	20.9	<0.001	Yes
	Canones Creek	Polvadera Creek	PVA	30	36.06	−106.44	0.10	0.10	18	16.2	ns	Yes
Pecos River	Pecos River	Dalton Creek	DAL	30	35.68	−105.76	0.27	0.25	25	22.9	ns	Yes
	Pecos River	Macho Creek	MCH	15(8)	35.69	−105.73	0.38	0.37	27	25.5	ns	Yes
	Pecos River	Rio Mora	MOR	29(10)	35.92	−105.51	0.22	0.21	27	21.1	ns	Yes
	Pecos River	Rio Mora tributary	MTR	30	35.90	−105.53	0.36	0.37	25	23.1	ns	Yes
	Pecos River	Rio Valdez	VAL	30	35.96	−105.52	0.57	0.68	48	37.5	ns	Yes
	Pecos River	Rito los Esteros	EST	31	35.59	−105.59	0.46	0.37	36	30.3	0.006	Yes
Canadian River	Vermejo River	Little Vermejo Creek	VJO	30	36.97	−105.13	0.58	0.59	64	43.1	ns	
	Vermejo River	Ricardo Creek (a)	RIC	20(15)	36.97	−105.13	0.60	0.57	68	45.9	ns	
	Vermejo River	Ricardo Creek (b)		20			0.62	0.60	68	46.7	ns	
	Ponil Creek	McCrystal Creek	MCC	30(16)	36.79	−105.13	0.31	0.33	30	21.2	ns	
	Mora Creek	Luna Creek E. Fork	LUE	6	36.22	−105.36	0.29	0.31	22	22.0	ns	
	Mora Creek	Luna Creek W. Fork	LUW	10	36.22	−105.35	0.43	0.35	32	28.6	ns	
	Rito Cebolla	Rito Murphy	MPH	14(8)	35.93	−105.41	0.35	0.34	26	24.3	ns	
O. c. stomias	Cascade Creek	Severy Creek	SEV	10(8)	38.87	−105.03	0.27	0.25	24	22.3	ns	
	Boulder Creek	Como Creek	COM	30(14)	40.03	−105.53	0.45	0.42	40	30.3	0.006	
O. c. pleuriticus	Lake Nanita	Lake Nanita	NAN	24(8)	40.26	−105.72	0.45	0.38	46	34.9	ns	
	San Juan River	Piedra Creek E. Fork	PIE	29(12)	37.53	−107.05	0.46	0.37	46	34.1	ns	

Significance of pairwise F_{st} was tested using permutation procedures (50,000 permutations). We also assessed genetic differentiation using an assignment test available in GENECLASS 1.0.02 (Cornuet et al. 1999). We used GENECLASS both to identify the most likely population of origin of each individual, and to calculate the probability of its belonging to each alternative population, by comparing the 'assignment value' of its genotype to that of 10,000 simulated genotypes. Two individuals genotyped at fewer than 8 loci were excluded.

Although most *O. c. virginalis* populations are currently isolated from one another, distribution of genetic diversity may still reflect historic gene flow. We tested for isolation-by-distance (IBD) within the three drainages by comparing $F_{st}/(1 - F_{st})$ to stream distance using the Mantel test in GENETIX (10,000 permutations). As inclusion of populations isolated above natural barriers may mask an overall pattern of IBD (Taylor et al. 2003; Crispo et al. 2006), we repeated the analysis for the Rio Grande omitting populations known to be located above waterfalls (CAN, COL, PVA, OSH). We also tested whether gene frequencies observed amongst populations within the three drainages were best explained by a model of immigration-drift equilibrium, or by a non-equilibrium model of fragmentation followed by drift with no gene flow, using the program 2-MOD (Ciofi and Bruford 1999). We ran each analysis twice to check for convergence, using 500,000 iterations with a burn-in of 50,000.

We used a hierachical analysis of molecular variance (AMOVA) implemented in ARLEQUIN (Schneider et al. 2000) to investigate how genetic variation within *O. c. virginalis* was partitioned within and between populations, over the three river drainages, and over different sub-drainages within the Rio Grande (Rio San Antonio, Rio Costilla, Red River, Rio Hondo, Rito de la Olla, Rio Pueblo, Canones Creek, Table 1). Samples ELR and CRI were excluded from the sub-drainage analysis.

We constructed an unrooted neighbor-joining tree based on the chord distance (D_{CE}) of Cavalli-Sforza and Edwards (1967) using GENDIST and NEIGHBOR in PHYLIP (Felsenstein 2005). Nodal support was assessed by generating 1,000 bootstrap trees. As an alternative method of exploring genetic associations between river drainages and taxa, without the constraints of a bifurcating tree, we used a factorial correspondence analysis (FCA) implemented in GENETIX. Finally, we investigated our dataset using STRUCTURE (Pritchard et al. 2000). Following Evanno et al. (2005) we used ΔK to identify the uppermost hierachical level of genetic partitioning; we then divided the populations and repeated the analysis for each partition. Occasionally, a population was split between partitions; for subsequent STRUCTURE runs, we assigned it to the one with the highest ancestral contribution. We applied a model of admixed ancestry with gene frequencies correlated between populations and used a burn-in of 50,000 followed by 200,000 MCMC steps. We ran each analysis for $K = 1$ to $K =$ (number of population samples + 2), with five replicates for each K.

Mitochondrial data analysis

We used an AMOVA to investigate how haplotype variation in *O. c. virginalis* was distributed within and between drainages. We used MrModeltest (Nylander 2004) to discover the best nucleotide substitution model for the COI and ND2 data, using Akaike's Information Criteria. We then inferred phylogenetic relationships among haplotypes using two different methods. First, we used a Bayesian method implemented in MrBayes 3.1.2 (Huelsenbeck and Ronquist 2001; Ronquist and Huelsenbeck 2003). We used 1,000,000 MCMC steps, with an empirically determined burn-in of 5,000. Second, we constructed a maximum likelihood tree using PAUP (Swofford 2000), and assessed support for this tree using 1,000 bootstrap replicates. The *O. c. henshawi* haplotype was used to root both trees.

Results

Microsatellite data

Samples varied substantially in their level of genetic diversity, and more than half exhibited fixed alleles for at least one locus (Table 1; Supplement A). Average proportion of missing genotypes per locus was 1.2% and varied from 0.4% (H114) to 3.5% (H126). Nine samples exhibited well supported deviations from HWE ($L < 0.05$, Table 1). Although we have previously proposed that observed deviations from HWE within *O. c. virginalis* populations reflect low N_e or fine-scale population substructure (Pritchard et al. 2007b) we have also noted evidence for null alleles at J103 or H126 in some cutthroat trout samples (Pritchard et al. 2007c). Results changed only slightly when these loci were omitted and did not alter any conclusions, hence we only present those obtained using the full dataset. We observed statistical evidence for linkage disequilibrium between three pairs of loci: J132 & K216 (8 significant tests out of 42, $L = 0.005$), K216 & H12 (7 out of 40, $L = 0.017$) and J14 & J103 (6 out of 37, $L = 0.05$). As statistical linkage disequilibrium among physically unlinked loci may arise due to genetic drift in populations with small N_e (Hill and Robertson 1968; Estoup et al.1998; Mäkinen et al. 2006), we chose to retain these loci in our analyses.

Genetic structure within drainages

Global F_{st} values were as follows: over all samples $F_{st} = 0.421$; all *O. c. virginalis*, $F_{st} = 0.407$; Canadian River, $F_{st} = 0.354$; Pecos River, $F_{st} = 0.383$; Rio Grande, $F_{st} = 0.314$. Most between-population pairwise F_{st} estimates were high, while estimates between temporally separated samples from the same population were low (Supplement B). Low pairwise F_{st} values were also observed between the samples from Little Vermejo Creek and above and below the barrier on nearby Ricardo Creek. Pairwise $F_{st} < 0.1$ were additionally observed within several groups of geographically close *O. c. virginalis* populations, for example those within the Rio Costilla and Rio Pueblo sub-drainages.

The assignment test classified the majority of fish with the highest probability to their own population (Supplement C). Wrongly assigned *O. c. virginalis* were always assigned within the same drainage. Overall, 40.3% of individuals were rejected ($P < 0.01$) as originating from any population except their own. Where individuals were not rejected from an alternative population, that population was usually geographically close to the true population. Apart from six Rio Grande individuals that were not rejected from Ricardo Creek, all *O. c. virginalis* were rejected from any population in a different drainage. No individual was assigned to another subspecies with $P > 0.001$.

Comparison of $F_{st}/(1 - F_{st})$ to stream distance within the Rio Grande drainage revealed a moderate relationship (Mantel test, 10,000 permutations: $r = 0.25$, $P = 0.07$), which became much stronger when populations above waterfalls were removed ($r = 0.39$, $P < 0.004$, Fig. 2). We observed no strong relationship between $F_{st}/(1 - F_{st})$ and distance within the Pecos ($r = 0.24$, $P = 0.18$) or Canadian ($r = 0.25$, $P = 0.13$) drainages. Results from 2-mod strongly supported a model of gene flow within both the Rio Grande ($P = 1.0$) and Canadian drainages ($P = 0.994$), but supported the alternative model of fragmentation followed by drift within the Pecos drainage ($P = 0.995$).

Genetic differentiation between drainages and relationships between subspecies

AMOVA results demonstrated a strong influence of both drainage and Rio Grande sub-drainage on the distribution of microsatellite genetic variance within *O. c. virginalis* (Table 2).

The neighbor-joining tree (Fig. 3) revealed several groups corresponding to geographical locality and taxonomic identity. One well-supported group contained all *O. c. virginalis* populations located in the Rio Grande drainage. Within this group was a strongly supported sub-group containing five populations in the Rio Costilla and Rio San Antonio sub-drainages and two less well supported sub-groups, one containing populations in the geographically proximate Red River, Rio Hondo, San Cristobal and Rio de la Olla sub-drainages, and the other containing populations in the Rio Pueblo sub-drainage. The two *O. c. stomias* samples grouped together with strong support, as did the two *O. c. pleuriticus* samples. However, relationships between the Canadian and Pecos *O. c. virginalis* samples, *O. c. pleuriticus* and *O. c. stomias* remained unresolved, with low bootstrap support at most nodes.

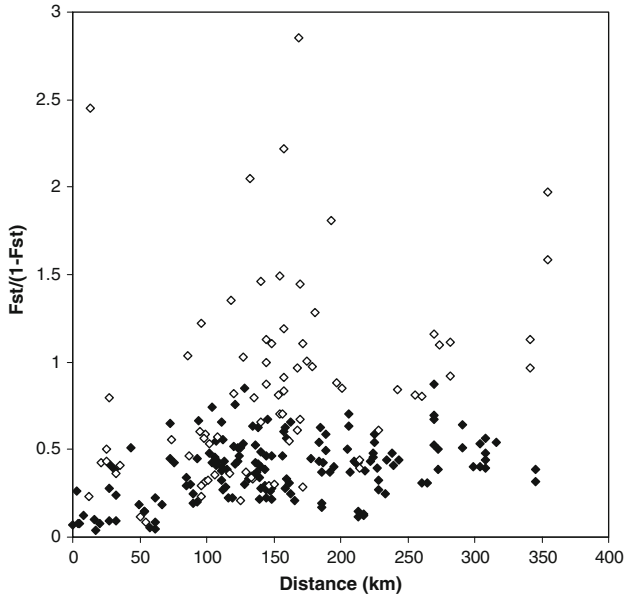

Fig. 2 Relationship between $F_{st}/(1 - F_{st})$ values and linear stream distance between populations within the Rio Grande drainage. Comparisons involving populations isolated above natural migration barriers are indicated by open diamonds

FCA scattergrams also revealed distinct clusters of individuals corresponding to different drainages and taxonomic affinities (Fig. 4). *O. c. virginalis* from the Rio Grande and Pecos drainages clearly separated along Axis 1. Individuals from the three northern Canadian populations formed an intermediate cluster, while individuals from the three southern Canadian populations grouped more closely with the Pecos samples. The two *O. c. stomias* samples formed a fourth distinct cluster; in contrast, *O. c. pleuriticus* only separated from northern Canadian *O. c. virginalis* along Axis 3.

Analysis with Structure similarly revealed a genetic split between the different river drainages and structuring of genetic diversity by sub-drainage within the Rio Grande (Fig. 5).

Mitochondrial sequence data

We observed 14 distinct haplotypes within the 150 individuals genotyped, most of which were unique to a single population (Table 3). Within *O. c. virginalis*, haplotype

Table 2 AMOVA results for each locus and over all loci

Among drainages					Among populations within drainages				Within populations			
Locus	V	%	F_{CT}	*P*	V	%	F_{SC}	*P*	V	%	F_{ST}	*P*
J3	0.22	46.36	0.46	0.000	0.11	23.77	0.44	0.000	0.14	29.87	0.70	0.000
J14	0.19	41.17	0.41	0.000	0.06	12.60	0.21	0.000	0.21	46.23	0.54	0.000
J103	0.03	7.10	0.07	0.002	0.15	30.71	0.33	0.000	0.29	62.19	0.38	0.000
J132	0.03	7.40	0.07	0.005	0.11	27.53	0.30	0.000	0.27	65.06	0.35	0.000
K216	0.00	−0.06	0.00	0.353	0.12	30.42	0.30	0.000	0.28	69.64	0.30	0.000
K222	0.08	21.44	0.21	0.001	0.08	22.79	0.29	0.000	0.20	55.76	0.44	0.000
H12	0.03	6.68	0.07	0.003	0.11	26.81	0.29	0.000	0.28	66.51	0.33	0.000
H18	0.07	20.17	0.20	0.000	0.09	25.59	0.32	0.000	0.19	54.24	0.46	0.000
H114	0.13	34.63	0.35	0.000	0.08	20.63	0.32	0.000	0.17	44.75	0.55	0.000
H118	0.04	12.21	0.12	0.017	0.13	41.07	0.47	0.000	0.15	46.73	0.53	0.000
H126	0.07	16.86	0.17	0.000	0.12	27.23	0.33	0.000	0.25	55.92	0.44	0.000
H220	0.10	20.17	0.20	0.000	0.16	31.87	0.40	0.000	0.24	47.95	0.52	0.000
All	**0.98**	**20.00**	**0.20**	**0.000**	**1.30**	**26.51**	**0.33**	**0.000**	**2.62**	**53.50**	**0.47**	**0.000**
Among Rio Grande subdrainages					Among populations within subdrainages				Within populations			
Locus	V	%	F_{CT}	*P*	V	%	F_{SC}	*P*	V	%	F_{ST}	*P*
J3	0.11	35.74	0.36	0.001	0.05	16.51	0.26	0.000	0.15	47.75	0.52	0.000
J14	0.03	14.59	0.15	0.000	0.01	3.96	0.05	0.000	0.19	81.45	0.19	0.000
J103	0.06	12.65	0.13	0.000	0.09	20.00	0.23	0.000	0.30	67.35	0.33	0.000
J132	0.03	7.75	0.08	0.086	0.09	22.89	0.25	0.000	0.27	69.36	0.31	0.000
K216	0.04	10.96	0.11	0.007	0.07	18.28	0.21	0.000	0.28	70.76	0.29	0.000
K222	0.01	4.51	0.05	0.193	0.06	22.12	0.23	0.000	0.19	73.37	0.27	0.000
H12	0.07	17.67	0.18	0.000	0.03	8.02	0.10	0.000	0.31	74.30	0.26	0.000
H18	0.06	24.68	0.25	0.000	0.01	5.44	0.07	0.000	0.17	69.88	0.30	0.000
H114	0.09	34.46	0.34	0.000	0.02	6.15	0.09	0.000	0.15	59.39	0.41	0.000
H118	0.09	34.70	0.35	0.003	0.05	17.34	0.27	0.000	0.13	47.96	0.52	0.000
H126	0.02	4.68	0.05	0.196	0.10	26.41	0.28	0.000	0.27	68.92	0.31	0.000
H220	0.10	23.68	0.24	0.000	0.06	14.94	0.20	0.000	0.26	61.38	0.39	0.000
All	**0.72**	**17.77**	**0.18**	**0.000**	**0.65**	**16.01**	**0.19**	**0.000**	**2.68**	**66.22**	**0.34**	**0.000**

diversity was significantly partitioned across the three drainages (AMOVA: between drainages 50.3%, $P < 0.0001$; between populations within drainages 43.4%, $P < 0.0001$; within populations 6.3%, $P = 0.004$).

MrModeltest found the best models of nucleotide substitution for COI and ND2 to be HKY + I and GTR + I, respectively. For tree construction using MrBayes, the sequence data were partitioned and the relevant model applied to each region. For tree construction using PAUP, a model of GTR plus 80% invariant sites was used for both regions. The Bayesian tree constructed in MrBayes and the maximum likelihood tree constructed in PAUP had identical branching topologies (Fig. 6). Within *O. c. virginalis*, we observed two well supported, reciprocally monophyletic mtDNA clades.

Discussion

Genetic structure within drainages

We found substantial genetic differentiation between most *O. c. virginalis* populations included in this study, even where separated by only a few kilometers of stream. Although microgeographic structuring appears generally typical of stream-dwelling trout (e.g. Estoup et al. 1998), decreases in effective population size caused by artificial fragmentation can rapidly exacerbate inter-population divergence (Hedrick 1999). In the case of cutthroat trout, a bias towards loss of populations not protected by natural barriers, and hence more vulnerable to invasion by non-native trout, will also cause an overall increase in F_{st}.

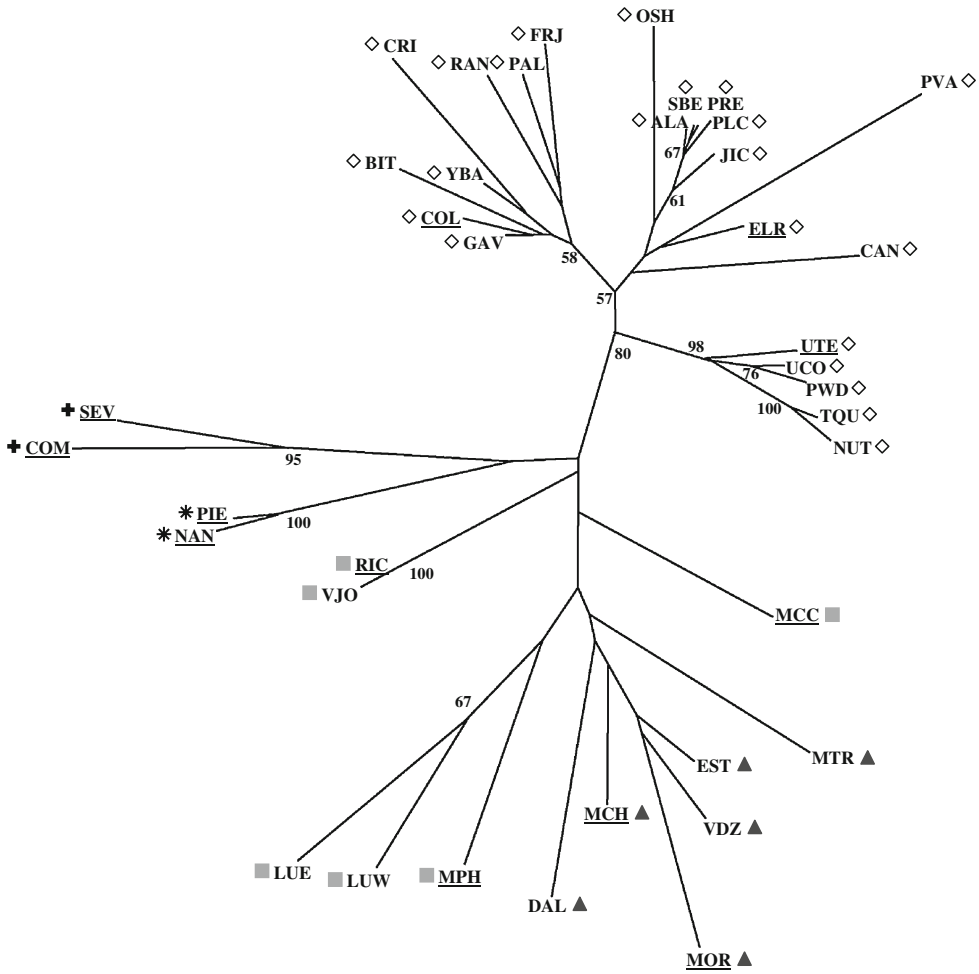

Fig. 3 Unrooted neighbor-joining tree, based on D_{CE} over 12 microsatellite loci. Bootstrap support >50% is shown at nodes. Populations for which mtDNA data are also available are underlined. ◇ Rio Grande *O. c. virginalis*; ▲ Pecos River *O. c. virginalis*; ■ Canadian River *O. c. virginalis*; + *O. c stomias*; ✳ *O. c. pleuriticus*

Although tests for a genetic signature of population size reductions in these streams have been inconclusive (Pritchard et al 2007b), there are several reasons to believe that recent anthropogenic impacts have contributed to the high levels of population differentiation seen in our study system. While observed values of F_{st} are comparable to those seen in microsatellite studies of other trout occupying fragmented drainages (*S. trutta*, Carlsson and Nilsson 2001; *S. marmoratus*, Fumagalli et al. 2002; *O. c. henshawi*, Nielsen and Sage 2002; *O. c. lewisi*, Taylor et al. 2003), they are rather higher than observed in less fragmented systems (*S. trutta*, Estoup et al. 1998; *O. c. lewisi*, Taylor et al. 2003, Young et al. 2004). Studies of cutthroat trout inhabiting high elevation streams have demonstrated substantial movement (Young 1996; Schmetterling and Adams 2004), and most localities sampled are linked by suitable trout habitat; hence there was clearly previous potential for gene flow between tributaries. The observed correlation of pairwise F_{st} to stream distance within the Rio Grande drainage and the results of the 2-mod analysis support such a hypothesis. In cases, gene flow may be ongoing, or have ceased very recently. The weak differentiation between fish collected in 2003 from Little Vermejo and Ricardo Creeks suggests a single panmictic population prior to construction of barriers between these streams in 1998. Cross-assignment of individuals and low pairwise F_{st} between populations within the several Rio Grande sub-drainages are also suggestive of recent gene flow. The contrasting 2-mod results in the Rio Grande and Pecos do not imply different historical levels of vagility in these drainages as a whole; rather, they reflect the fact that all extant *O. c. virginalis* populations sampled in the Pecos are isolated above waterfalls.

Genetic differentiation between drainages and relationships between subspecies

Microsatellite data revealed clear genetic differentiation between *O. c. virginalis* within the Rio Grande and *O. c. virginalis* within the Canadian and Pecos River drainages, and clear structuring by sub-drainage within the Rio Grande. AMOVA results were similar to those of Taylor et al. (2003), who found watershed to explain 20% of microsatellite variation in *O. c. lewisi*, and Gum et al.

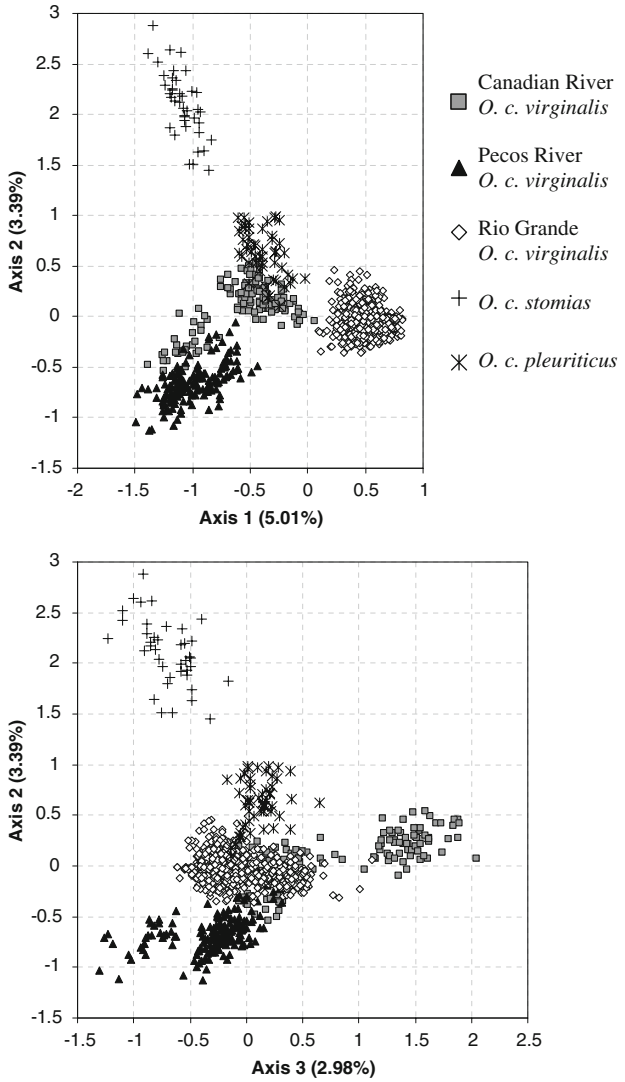

Fig. 4 Scattergraphs showing results of Factorial Correspondence Analysis. Position of individuals along the first three axes are shown

(2003) who found drainage to explain a similar amount of variation in European grayling (*Thymallus thymallus).* They contrast with those of Nielsen and Sage (2002) who attributed only 9.8% of microsatellite variation to the subspecies component within the closely related but morphologically divergent Lahontan, Paiute (*O. c. seleneris*) and Humboldt (*O. c. spp*) cutthroat trout.

We were unable to draw strong conclusions about the evolutionary relationship between *O. c. virginalis* within the different drainages, *O. c. pleuriticus*, and *O. c. stomias* on the basis of microsatellites alone. While Structure and FCA results suggested a closer relationship between populations in the Pecos and southern Canadian drainages than those in the northern Canadian, this was not well supported in the neighbor-joining tree. The poor resolution of portions of the tree involving Canadian and Pecos populations may partly be due to anthropogenic factors. First, as most extant populations in the Pecos, and all of those sampled for this study, are located above natural barriers, their microsatellite composition is expected to reflect founder effects and drift rather than historical connectivity. Second, many streams sampled in this study are known to have been stocked with 'New Mexico cutthroat', largely derived from the Rio Costilla; introgression from this line is more likely to obscure evolutionary relationships within the Canadian and Pecos than within the Rio Grande, because fewer alleles are expected to be shared between drainages than between populations within drainages. This stocking may also explain the high bootstrap support observed for the group containing samples from the Rio Costilla compared to other groups within the Rio Grande. The inclusion of geographically distant TQU and NUT within this group may indicate that these populations originated via a stocking of 'New Mexico Cutthroat' into previously fishless waters; alternatively, it may indicate fewer historic barriers to gene flow between more northern populations compared to those further south.

Addition of mtDNA sequence data greatly clarified evolutionary relationships. Haplotypes found in populations identified as *O. c. virginalis* appeared more closely related to each other than they did to *O. c. pleuriticus* or *O. c. stomias* haplotypes. Within *O. c. virginalis*, we observed two well-supported, reciprocally monophyletic mtDNA clades. With the exception of a single haplotype found in Ricardo Creek, which could have entered this population via stocking, the clades corresponded to the geographical split between the Rio Grande drainage and the Pecos and Canadian drainages. Both the mtDNA and microsatellite data suggest a more recent split between *O. c. virginalis* populations in the Canadian and Pecos drainages than between the Canadian/Pecos and Rio Grande lineages. Additionally, the similarity of the Canadian and Pecos haplotypes supports a hypothesis of colonization of the Canadian drainage from the Pecos. We found no evidence that this colonization occurred via recent anthropogenic transplants. We discovered no records of Pecos populations contributing to 'New Mexico cutthroat' stocked in New Mexico waters. Although local transplants between the Pecos and the geographically adjacent southern Canadian drainage are conceivable, direct stream-to-stream transplants between the Pecos and the remote northern Canadian drainage appear unlikely. Our results corroborate suggestions by Conner and Suttkus (1986) and Thomas (1972) of headwater exchange between the Canadian and Pecos drainages during the Pleistocene. Additionally, they suggest that Pleistocene gene flow via the Rio Grande - Pecos confluence may not have been an important factor in the evolutionary history of *O. c. virginalis*.

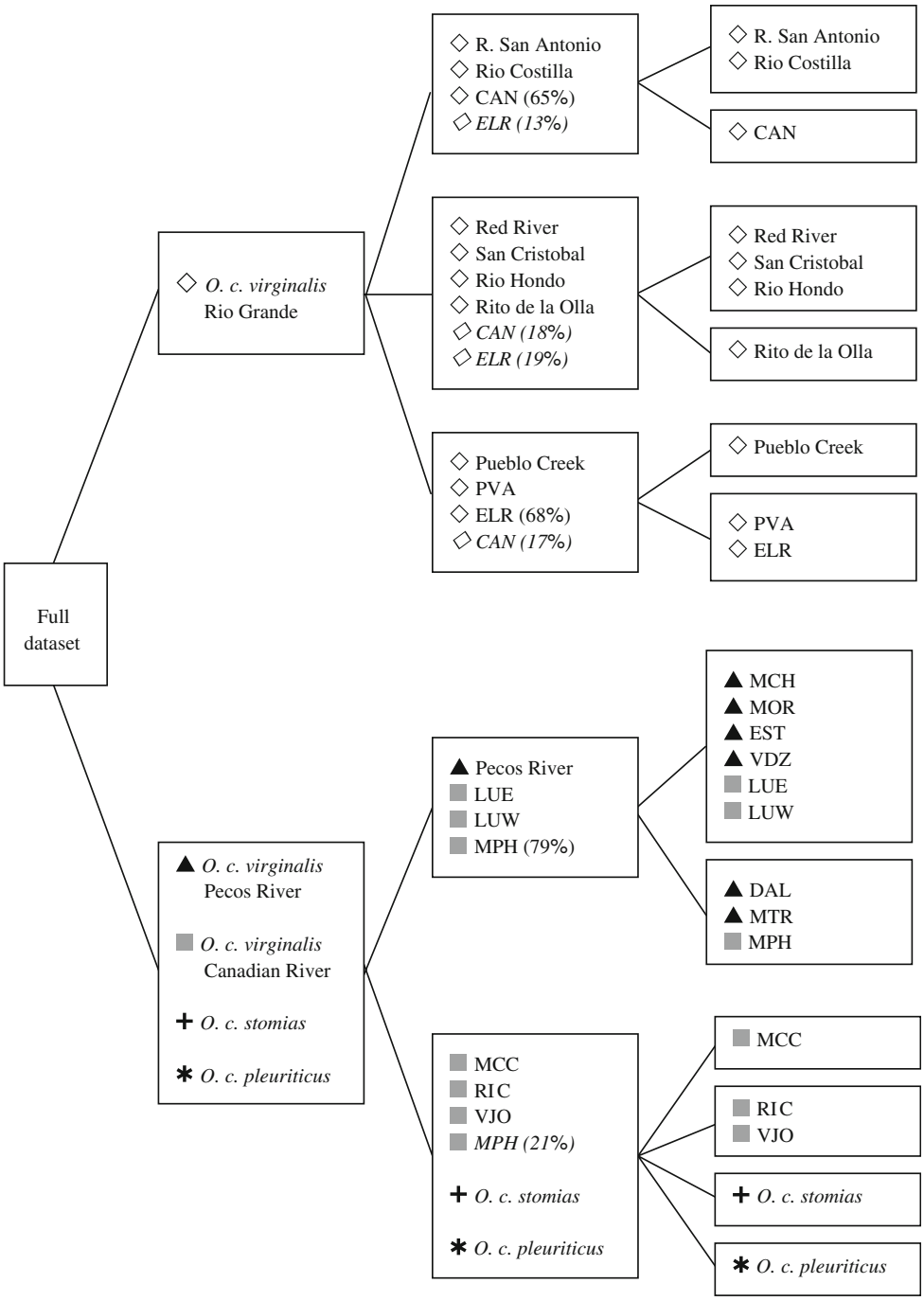

Fig. 5 Results of Structure analyses. For each subset of data, the uppermost hierachical level of structure was identified using ΔK, and the data was partitioned accordingly. Except where indicated, >95% of each population sample was assigned to a single partition

Management implications

Each extant population of *O. c. virginalis* contains a small proportion of the genetic diversity remaining in the subspecies as a whole. Retention of as many extant populations as possible, at a sufficient size to minimize further loss of diversity due to drift, is therefore necessary if managers wish to maintain the genetic variation currently remaining within the taxon. Ideally, creation of new barriers should be avoided and efforts should be made to restore migration corridors between populations within sub-drainages. Unfortunately, although it is the stated long-term goal of managers in Colorado and New Mexico to restore population connectivity, barrier construction is likely to continue in the short-term. Clearly the advantages of man-made barriers at excluding unwanted species must be weighed against unintended consequences that further fragment populations or impose genetic selection altering life history features such as movement behavior. In this case, population genetic studies can help inform barrier

Table 3 Genbank Accession numbers, subspecies and drainage origin, and number observed in each sample, for the 16 unique mtDNA haplotypes found in this study

Haplotype	Subspecies	Drainage	Population & number	Genbank accession no.	
				COI	ND2
A	*O. c. virginalis*	Canadian	MPH: 9	EU341825	EU338404
B	*O. c. virginalis*	Canadian	RIC: 12	EU341829	EU338408
C	*O. c. virginalis*	Canadian	RIC: 1	EU341831	EU338410
D	*O. c. virginalis*	Canadian	MCC: 16	EU341827	EU338406
E	*O. c. virginalis*	Pecos	MOR: 10; MCH: 8	EU341826	EU338405
F	*O. c. virginalis*	Rio Grande	CAN: 14	EF673236	EF673263
G	*O. c. virginalis*	Canadian	RIC: 3	EU341830	EU338409
H	*O. c. virginalis*	Rio Grande	ELR: 15; COL: 2	EF673235	EF673262
I	*O. c. virginalis*	Rio Grande	COL: 1	EF673234	EF673261
J	*O. c. virginalis*	Rio Grande	UTE: 10	EU341828	EU338407
K	*O. c. virginalis*	Rio Grande	COL: 5	EF673233	EF673260
	O. c. stomias	*na*	COM: 14; SEV: 8	EF673223	EF673250
	O. c. pleuriticus 1	*na*	NAN: 3	EF673228	EF673255
	O. c. pleuriticus 2	*na*	NAN: 5; PIE: 12	EF673229	EF673256
	O. c. bouvieri	*na*	*na*	EF673243	EF673270
	O. c. henshawi	*na*	*na*	EF673247	EF673274

Letters or subspecies names designating haplotypes correspond to those in Fig. 6. *na* : not applicable

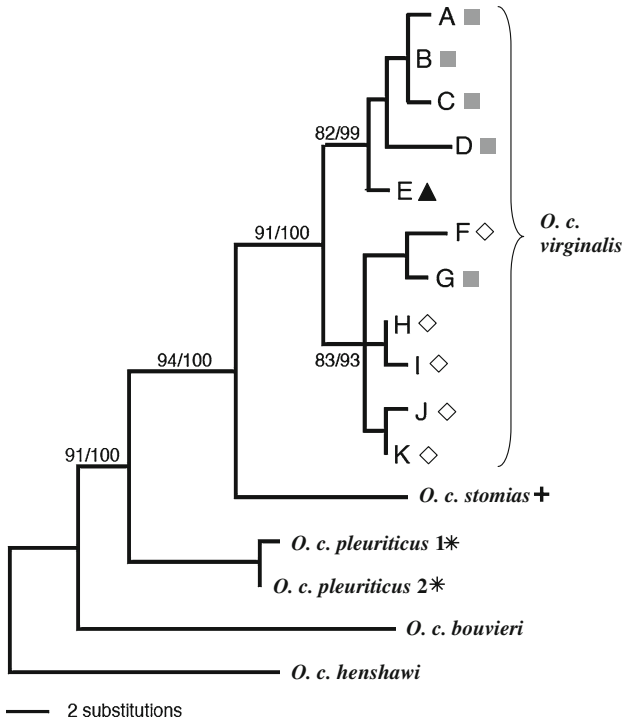

Fig. 6 Phylogram showing relationships inferred between mtDNA haplotypes. Bootstrap support (left) and Bayesian posterior probabilities (right) are shown at nodes. ◇ Rio Grande *O. c. virginalis*; ▲ Pecos River *O. c. virginalis*; ■ Canadian River *O. c. virginalis*; + *O. c. stomias*; ✳ *O. c. pleuriticus*

placement and identify suitable sources for population supplementation via fish transplantation, if this is considered necessary. Within the Rio Grande, we identified clear genetic structuring by sub-drainage, which could form the basis for management units within this river system.

Although *O. c. virginalis* populations in the Canadian, Pecos and Rio Grande drainages were believed to have been geographically isolated for several thousand years, it was previously unknown whether anthropogenic transplants had obscured any genetic differentiation which had arisen during this time. We have shown that, despite the extensive introduction of a Rio Grande-derived broodstock into the Canadian and Pecos river drainages, *O. c. virginalis* retains the genetic signature of long-term isolation between drainages. If we assume that the single 'Rio Grande' haplotype observed in Ricardo Creek arrived there by recent human activity, then *O. c. virginalis* in the Rio Grande and *O. c. virginalis* in the Pecos and Canadian constitute two separate 'evolutionary significant units' under the genetic definition of Moritz (1994). Although we currently have no information as to whether this long-term isolation has resulted in ecological differentiation between the drainages, we strongly recommend that inter-drainage transfers are avoided and efforts are made to protect the unique genetic diversity of all three river systems.

Acknowledgements This research was funded by NMDGF through the Federal Aid in Sport Fish Restoration Act, the New Mexico Agricultural Experiment Station, Colorado Division of Wildlife

(CDOW), Rocky Mountain National Park and USFWS. Tissue samples were provided by CDOW, NMDGF, USDA Forest Service, Chris Kennedy (USFWS), Jim Melby (CDOW), Dennis Shiozawa and Paul Evans (Monte L. Bean Life Science Museum, Brigham Young University). We thank staff at GIS for technical support.

References

Allendorf FW, Leary RF (1988) Conservation and distribution of genetic variation in a polytypic species, the cutthroat trout. Conserv Biol 2:170–184. doi:10.1111/j.1523-1739.1988.tb00168.x

Bachhuber FW (1989) The occurrence and paleolimnologic significance of cutthroat trout (*Oncorhynchus clarki*) in pluvial lakes of the Estancia Valley, central New Mexico. Geol Soc Am Bull 101:1543–1551. doi:10.1130/0016-7606(1989)101<1543:TOAPSO>2.3.CO;2

Behnke RJ (2002) Trout and salmon of North America. Free Press, New York

Belkhir K, Borsa P, Chiki L, Raufaste N, Bonhomme F (2001) GENETIX 4.02, logiciel sous Windows TM pour la génétique des populations. Laboratoire Génome, Populations, Interactions CNRS UMR 5000, Université de Montpellier II, Montpellier (France)

Carlsson J, Nilsson J (2001) Effects of geomorphological structures on genetic differentiation among brown trout populations in a northern boreal river drainage. Trans Am Fish Soc 130:36–45. doi:10.1577/1548-8659(2001)130<0036:EOGSOG>2.0.CO;2

Cavalli-Sforza LL, Edwards AWF (1967) Phylogenetic analysis: models and estimation procedures. Evol Int J Org Evol 32:550–570. doi:10.2307/2406616

Chapman RW, Sedberry GR, Koenig CC, Eleby BM (1999) Stock identification of gag, *Mycteroperca microlepis*, along the southeast coast of the United States. Mar Biotechnol 1:137–146. doi:10.1007/PL00011761

Ciofi C, Bruford MW (1999) Genetic structure and gene flow among Komodo dragon populations inferred by microsatellite loci analysis. Mol Ecol 8(Suppl 1):S17–S30. doi:10.1046/j.1365-294X.1999.00734.x

Conner JV, Suttkus RD (1986) Zoogeography of freshwater fishes of the western Gulf Slope of North America. In: Hocutt CH, Wiley EO (eds) The zoogeography of North American freshwater fishes. John Wiley and Sons, New York, pp 413–456

Cornuet JM, Piry S, Luikart G, Estoup A, Solignac M (1999) New methods employing multilocus genotypes to select or exclude populations as origins of individuals. Genetics 153:1989–2000

Crispo E, Bentzen P, Reznick DN, Kinnison MT, Hendry AP (2006) The relative influence of natural selection and geography on gene flow in guppies. Mol Ecol 15:49–62. doi:10.1111/j.1365-294X.2005.02764.x

Estoup A, Rousset F, Michalakis Y, Cornuet J-M, Adriamange M, Guyomard R (1998) Comparative analysis of microsatellite and allozyme markers: a case study investigating microgeographic differentiation in brown trout (*Salmo trutta*). Mol Ecol 7:339–353. doi:10.1046/j.1365-294X.1998.00362.x

Evanno G, Regnaut S, Goudet J (2005) Detecting the number of clusters of individuals using the software STRUCTURE: a simulation study. Mol Ecol 14:2611–2620. doi:10.1111/j.1365-294X.2005.02553.x

Felsenstein J (2005) PHYLIP (Phylogeny Inference Package) version 3.6. Distributed by the author. Department of Genome Sciences. University of Washington, Seattle, Washington

Fumagalli L, Snoj A, Jesenšek D et al (2002) Extreme genetic differentiation among the remnant populations of marble trout (*Salmo marmoratus*) in Slovenia. Mol Ecol 11:2711–2716. doi:10.1046/j.1365-294X.2002.01648.x

Goudet J (2001) FSTAT, a program to estimate and test gene diversities and fixation indices (version 2.9.3). Available from: http://www.unil.ch/izea/softwares/fstat.html

Gum B, Gross R, Rottmann O, Schröder W, Kühn R (2003) Microsatellite variation in Bavarian populations of European grayling (*Thymallus thymallus*): Implications for conservation. Conserv Genet 4:659–672. doi:10.1023/B:COGE.0000006106.64243.e6

Hedrick PW (1999) Highly variable loci and their interpretation in evolution and conservation. Evol Int J Org Evol 53:313–318. doi:10.2307/2640768

Hill WG, Robertson A (1968) Linkage disequilibrium in finite populations. Theor Appl Genet 38:226–231. doi:10.1007/BF01245622

Huelsenbeck JP, Ronquist F (2001) MRBAYES: BAYESIAN inference of phylogenetic trees. Bioinformatics 17:754–755. doi:10.1093/bioinformatics/17.8.754

Keeler-Foster CL (2003) Rio Grande cutthroat trout (*Oncorhynchus clarki virginalis*): Population genetics and hybridization with introduced rainbow trout (*Oncorhynchus mykiss*). Ph.D. thesis, New Mexico State University

Kinnison MT, Bentzen P, Unwin MJ, Quinn TP (2002) Reconstructing recent divergence: evaluating nonequilibrium population structure in New Zealand chinook salmon. Mol Ecol 11:739–754. doi:10.1046/j.1365-294X.2002.01477.x

Leary RF, Allendorf FW, Phelps SR, Knudsen KL (1987) Genetic divergence among seven subspecies of cutthroat trout and rainbow trout. Trans Am Fish Soc 116:580–587. doi:10.1577/1548-8659(1987)116<580:GDAIOS>2.0.CO;2

Loudenslager EJ, Gall GAE (1980) Geographic patterns of protein variation and subspeciation in the cutthroat trout. Syst Zool 29:27–42. doi:10.2307/2412624

Mäkinen HS, Cano JM, Merilä J (2006) Genetic relationships among marine and freshwater populations of the European three-spined stickleback (*Gasterosteus aculeatus*) revealed by microsatellites. Mol Ecol 15:1519–1534. doi:10.1111/j.1365-294X.2006.02871.x

Metcalf JL, Pritchard VL, Silvestri SM et al (2007) Across the great divide: genetic forensics reveals misidentification of endangered cutthroat trout populations. Mol Ecol 16:4445–4454. doi:10.1111/j.1365-294X.2007.03472.x

Moritz C (1994) Applications of mitochondrial DNA analysis in conservation: a critical review. Mol Ecol 3:401–411. doi:10.1111/j.1365-294X.1994.tb00080.x

Nei M (1987) Molecular evolutionary genetics. Columbia University Press, New York, USA

Nielsen JL, Sage GK (2002) Population genetic structure in Lahontan cutthroat trout. Trans Am Fish Soc 131:376–388. doi :10.1577/1548-8659(2002)131<0376:PGSILC>2.0.CO;2

Novinger DC, Rahel FJ (2003) Isolation management with artificial barriers as a conservation strategy for cutthroat tout in headwater streams. Conserv Biol 17:772–781. doi:10.1046/j.1523-1739.2003.00472.x

Nylander JAA (2004) MrModeltest v2. Program distributed by the author. Evolutionary Biology Centre, Uppsala University, Uppsala

Peacock MM, Kirchoff VS (2004) Assessing the conservation value of hybridized cutthroat trout populations. Trans Am Fish Soc 133:309–325. doi:10.1577/03-017

Peterson DP, Fausch KD, White DC (2004) Population ecology of an invasion, Effects of brook trout on native cutthroat trout. Ecol Appl 14:754–772. doi:10.1890/02-5395

Pritchard JK, Stephens P, Donnelly P (2000) Inference of population structure using multilocus genotype data. Genetics 155:945–959

Pritchard VL, Jones K, Cowley DE (2007a) Estimation of introgression in cutthroat trout populations using microsatellites. Conserv Genet 8:1311–1329. doi:10.1007/s10592-006-9280-0

Pritchard VL, Jones K, Cowley DE (2007b) Genetic diversity within fragmented cutthroat trout populations. Trans Am Fish Soc 136:606–623. doi:10.1577/T06-038.1

Pritchard VL, Jones K, Metcalf JL , Martin AP, Wilkinson P, Cowley DE (2007c) Characterization of tetranucleotide microsatellites for Rio Grande cutthroat trout and rainbow trout, and their cross-amplification in other cutthroat trout subspecies. Mol Ecol Notes 7:594–596. doi:10.1111/j.1471-8286.2007.01695.x

Raymond M, Rousset F (1995) GENEPOP (version 1.2): population genetics software for exact tests and ecumenicism. J Hered 86:248–249

Ronquist F, Huelsenbeck JP (2003) MrBayes 3: Bayesian phylogenetic inference under mixed models. Bioinformatics 19:1572–1574. doi:10.1093/bioinformatics/btg180

Schmetterling DA, Adams SB (2004) Summer movements within the fish community of a small montane stream. N Am J Fish Manage 24:1163–1172. doi:10.1577/M03-025.1

Schneider S, Roessli D, Excoffier L (2000) Arlequin ver 2.000: a software for population genetics data analysis. Genetics and Biometry Laboratory, University of Geneva, Switzerland

Shemai B, Sallenave R, Cowley DE (2007) Competition between hatchery-raised Rio Grande cutthroat trout and wild brown trout. N Am J Fish Manage 27:315–325. doi:10.1577/M06-046.1

Swofford DL (2000) PAUP* phylogenetic analysis using parsimony (*and other methods). Version 4. Sinauer Associates, Sunderland, Massachusetts

Taylor EB, Stamford MD, Baxter JS (2003) Population subdivision in westslope cutthroat trout (*Oncorhynchus clarki lewisi*) at the northern periphery of its range: evolutionary inferences and conservation implications. Mol Ecol 12:2609–2622. doi:10.1046/j.1365-294X.2003.01937.x

Tessier N, Bernatchez L (1999) Stability of population structure and genetic diversity across generations assessed by microsatellites among sympatric populations of landlocked Atlantic salmon (*Salmo salar* L.). Mol Ecol 8:169–179. doi:10.1046/j.1365-294X.1999.00547.x

Thomas RG (1972) The geomorphic evolution of the Pecos River system. Bull Bayl Geol Stud 22:1–40

Weir BS, Cockerham CC (1984) Estimating F statistics for the analysis of population structure. Evol Int J Org Evol 38:1358–1370. doi:10.2307/2408641

Young MK (1996) Summer movements and habitat use by Colorado River cutthroat trout in small, montane streams. Can J Fish Aquat Sci 53:1403–1408. doi:10.1139/cjfas-53-6-1403

Young SF, McLellan JG, Shaklee JB (2004) Genetic integrity and microgeographic population structure of westslope cutthroat trout, *Oncorhynchus clarki lewisi*, in the Pend Oreille Basin in Washington. Environ Biol Fishes 69:127–142. doi:10.1023/B:EBFI.0000022886.47243.bf